No.8 JinSheng Road, JinXia community, ChangAn Town, DongGuan City, Guangdong Province

TEL：0769-82716188 FAX：0769-81606698
E-mail：optmv@optmv.com website：www.optmv.com

OPT-DPA2024EC
Multiple Voltages LED Light Controller
User Manual

OPT Machine Vision Tech Co.,Ltd.

Revised in June 2,2022 V1.0.1

Copyright Reserved

1. All the logos and names of hardware and software products mentioned in this manual belong to OPT.

2. The copyright of this manual belongs to OPT Machine Vision Tech Co.,Ltd. Replication and distribution of the contents in any form, anywhere without permission from our company is straightly prohibited. The contents of this manual are subject to change without prior notice.

Caution and Warning

	Caution and Warning
	Please read the manual carefully in advance and strictly follow the instructions when operating the product.
	In case of any abnormal situation, please contact us and never disassemble the product by yourself.
	Please ensure that this product is well grounded to prevent electric shock.
	Do not stare directly into the light emitted from the LED since it does harm to your eyes. If a matched object is used, please take care not to let reflected light to enter your eyes.

Document Version Description

Version	Modification Date	Modification Explanation
V1.0.0	2022.3.20	First release
V1.0.1	2022.6.2	1. Modify the maximum output current 2. Add DO parameters

Contents

1. Product Introduction....1
1.1 Overview....1
1.2 Selection Guide....1
1.2.1、Host Model Description....1
1.2.2、Expansion module model description....1
1.3 Notice For Accessories Selection....2
1.4 Shipping Standard List....2
1.5 Performance Parameters....3
1.6 Error Code Description....4
1.7 Indicator display Description....5
2. Operation Instructions....6
2.1 Panel Description....6
2.2 Connection Steps....7
2.3 Brightness Setting....7
2.4 Trigger Function....8
2.4.1 Trigger Mode Description....8
2.4.2 Sequence Reference Diagram Of Response Time....10
2.4.3 Trigger Wiring Diagram....12
2.5 DO Function....13
3. Software Operation Instructions....14
3.1 Software Function Description....14
3.2 Programmable Trigger Software Operating Instructions....21
3.3 User Programming Manual....24
4.Dimension Diagram....25
Mechanical Parameters....25
OPT-DPA2024EC-4....25
OPT-EMA2024EC-4....26

1. Product Introduction

1.1 Overview

First of all, thank you for choosing OPT products. The controllers is: OPT-DPA2024EC-4/ OPT-EMA2024EC-4, is DC input multiple voltages type current controller with four channel interfaces and expandable channels (up to 36 channels). It is applied to the LED light with rated voltage of 3-48V and current of 20mA-4A. It has the following functions: 256-level brightness adjustment, multi-channel simultaneous communication,normal trigger, high intensity trigger, programmable trigger, pulse width trigger can be set, trigger delay, manual setting of maximum output current, 100M Ethernet communication , RS232 communication, DO output function.

1.2 Selection Guide

1.2.1、Host Model Description

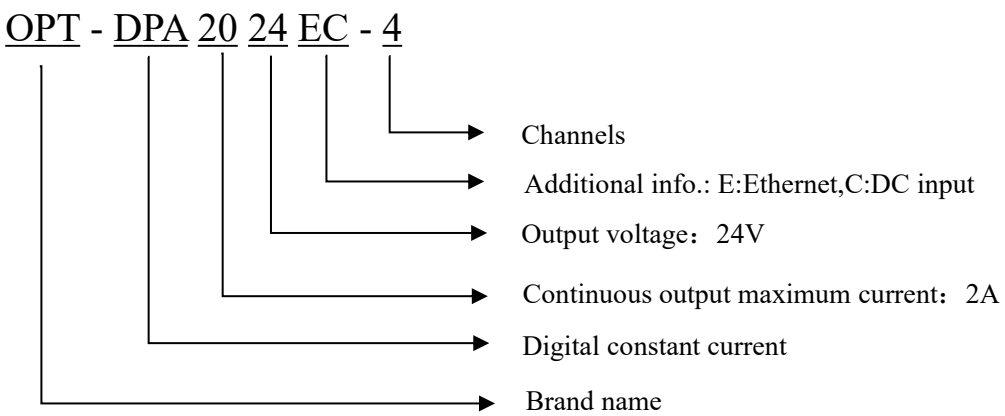

1.2.2、Expansion module model description

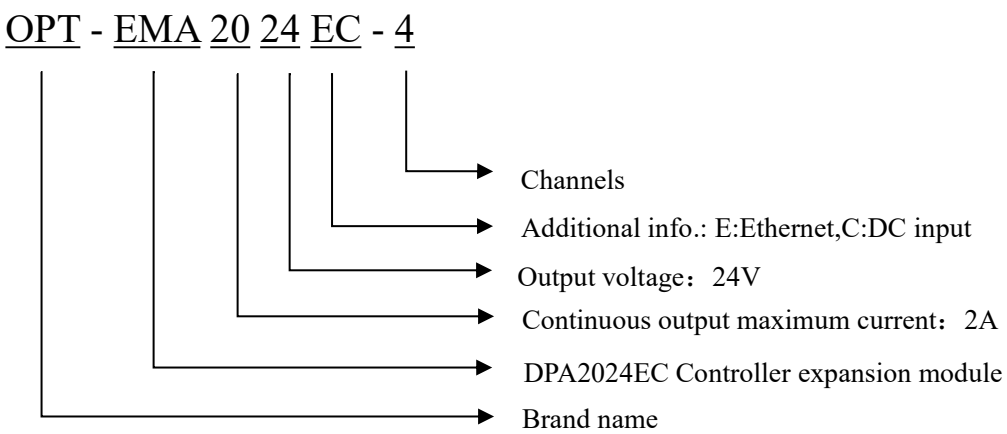

1.3 Notice For Accessories Selection

1.Network Cable Selection

Shipped standard network cable: six types, pure copper, 3 meters in length

Precautions for self-purchased network cable: Category 6 (including Category 6) and above, made of pure copper; length within 50 meters

2. Precautions for buying a switch or router

choose a well-known brand such as Netgear, the best rate is 100Mbps (Including 100Mbps) and above ,The following models are available：

Router: Netgear WGR614 (150Mbps)）

Switch: Netgear FS308 (8-port 100M）

1.4 Shipping Standard List

Item	Model specifications	Image	Quantity
Controller	DPA2024EC-4		1
Serial cable	Direct connection L = 1.8 m		1
Network cable	Six pure copper L = 3m		1
Connector	2.5-5PIN	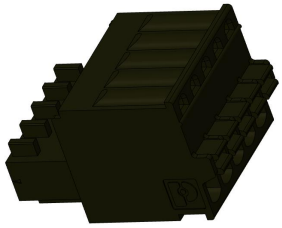	4

1.5 Performance Parameters

Item	Parameter	Description
Input voltage	Supply voltage：DC 22~26V LED light input voltage：DC 5~48V	$V_{in} = V_o + I * R + V_{mos}$， V_{in} is the LED light input voltage， V_o is the output voltage， I is the operating current of the LED light， R is the current limiting resistance， $R \approx 0.25\Omega$， V_{mos} is the DS pole voltage of the internal power tube；Note： $V_{mos} * I \leqslant 3W$;
Input current	DC24V:0.5mA CH1-CH4:4A/CH MAX	
Lighting mode	Continuous / Strobe	Set via the working mode switch or DEMO software
Manual setting for max.output current	20mA - 4A	Set via DEMO software
Intensity control	256 levels	Set via the adjustment knob or DEMO software
Short-circuit Protection	Yes.	The related channel is shut down and “Er2” displays.
Triggering	Level	
Normal trigger	256 intensity levels settable	
Normal trigger time unit	1μs/10μs/1ms/100ms	Set via DEMO software
Normal trigger pulse width	30μs-30s	Set via the adjustment knob or DEMO software
High intensity trigger	4A output per channel	
High intensity trigger pulse width	0.03-5.00ms	Set via the adjustment knob or DEMO software
Programmable trigger	Support up to 64 processes	The intensity, pulse width ,and trigger source of each step can be set
Response time	≥ 30μs	Refer to Section 2.4.2 trigger sequence Table 2-2 trigger response time table for more details
Trigger frequency	≤ 20kHz	Refer to Section 2.4.2 trigger sequence Table 2-2 trigger

Item	Parameter		Description
			response time table for more details
Set trigger delay time Unit	1μs/10μs/1ms		Set via DEMO software
Set trigger delay	1μs~6553ms		Set via DEMO software
DO output function	4CH		1. Load capacity ≤100mA 2. with overcurrent protection 3. Output frequency ≤20kHz 4. Open collector output
DO pulse width time unit	1μs/10μs/1ms/100ms		Set via DEMO software
DO pulse width	1μs-30s		Set via the adjustment knob or DEMO software
DO delay time Unit	1μs/10μs/1ms		Set via DEMO software
DO delay	1μs~6553ms		Set via DEMO software
Output current	Maximum continuous output current: 2A; Instantaneous maximum output current: 4A;		
Communication	RS232 / Ethernet		
Standby power consumption	≤ 2W		Tested at 24V DC
Operating temperature	-5℃-50℃		
Dimensions（mm^3）（L×W×H）	DPA2024EC-4	41.5×103.7×145	See dimension diagram for details
	EMA2024EC-4	28.3×103×145	
Weight (Kg）	DPA2024EC-4	0.22	
	EMA2024EC-4	0.16	

1.6 Error Code Description

Code	Description	Display	Solution
Er0	No LED connected	"Er0"	Connect an LED light
Er2	Short Circuit Protection	"Er2"	Remove the error and restart
Er5	Communication error between display board and main board	"Er5"	Return to OPT for repair

Note: The digital tube displays "-----" when the controller is turned on, and the corresponding value will be displayed after the controller is turned on.

1.7 Indicator display Description

location	instructions
CON	Continuous mode
NTR	Normal trigger mode
HTR	High intensity trigger mode
LOC	Key lock, this time the key function is invalid;The button will be locked only when the software sets the working mode. When the working mode is set to panel mode, the button will be unlocked

2. Operation Instructions

2.1 Panel Description

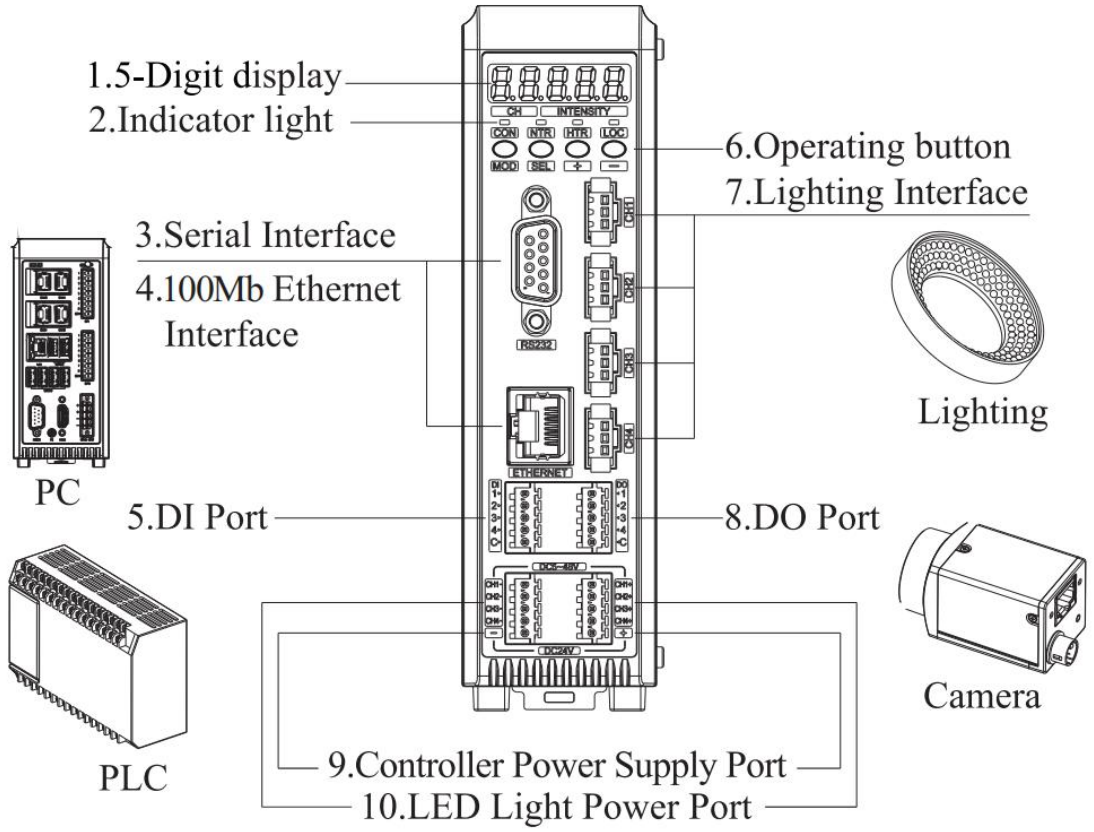

Figure 2.1 Panel Description Diagram

No.	Item	Description
1	5-digit display	From the left, the first digit is the tens digit of the number of channels, the second digit is the ones digit of the number of channels, and the last three digits are the values corresponding to the current operation
2	Indicator light	Indicates the current working mode. "CON" is steady on mode, "NTR" is common trigger mode, "HTR" is highlighted trigger mode, and "LOC" is key lock mode
3	Serial Interface	Female,communicate with PC equipment via RS232
4	100Mb Ethernet Interface	Communicate via Ethernet and PC devices
5	DI Port	Connect external trigger signal source for synchronous strobe work,trigger pulse width can be set
6	Function keys	(MOD) button is the key to set the working mode. In panel control mode, press this button for about 1S to switch the

No.	Item	Description
		working mode to steady on mode, common trigger mode and highlight trigger mode, and the corresponding working mode indicator will also light up.(SEL) key is the parameter setting key. In panel control mode, tap this key to select the corresponding numeric bit displayed on the digital tube;The (+) key adds to the operation and the (-) key subtracts from the operation
7	Light Interface	A total of 4 LED lights output, each channel can be independently controlled
8	DO Port	A total of 4 open collector output
9	Controller Power Supply Port	"+" "-" port input DC23-25V,
10	LED Light Power Port	"CH1 2/3/4 +"/" CH1/2/3/4 - " port input DC5-48V

2.2 Connection Steps

Step 1 Connect the LED light to the controller (refer to Figure 2.1)
Step 2 If external trigger control is required, please connect the external trigger signal source to the trigger port of the controller.
Step 3 "+" "-" port input DC22 - 26 V power supply , "CH1/2/3/4 +" "CH1/2/3/4 -" port input DC5-48 V . When the light is on and the digital tube displays the channel value, it means that it is powered on.
Step 4 If you need to control the controller with a PC device, please use the RS232 data cable or network cable to connect to the PC device in the shutdown state, and then use the DEMO program provided by our company or the program written by your company to control it. When operating in RS232 mode/Ethernet mode, the parameters of each channel can still be set manually, that is, both the host computer and the controller can set the parameters without the need for mode conversion.

2.3 Brightness Setting

1. Manual mode

(1) In the Continuous mode, press SEL button and the first nixie tube starts flashing, which means that you can select the ten digit of the channel number to set brightness. At this time, press + to increase the channel bit value, and press - to decrease the channel bit value.
(2) After selecting the ten digit of the channel, press SEL button again. The second digital tube starts flashing, indicating that the bits of the current channel can be adjusted. At this time, press + to increase the bits value of the channel number, and press - to decrease the bits value of the channel number.
(3) After selecting the channel position, press "SEL" button again, and the second digital tube starts flashing, which means that the brightness value of the current channel can be adjusted to the hundreds. At this time, press " +" to increase the brightness value of the hundreds, and press " - " to decrease the brightness value of the hundreds.

(4) After adjusting the hundreds of brightness value, press "SEL" button again, and the third digital tube starts flashing, indicating that the ten's of brightness value of the current channel can be adjusted. At this time, press " + " to increase the hundreds of brightness value, and press " - " to decrease the hundreds of brightness value.

(5) After adjusting the ten's of brightness value, press " SEL" button again, and the fourth digital tube begins to blink, indicating that the bits of brightness value of the current channel can be adjusted. At this time, press " + " to increase the hundreds of brightness value, and press " - " to decrease the hundreds of brightness value.

(6) After adjusting the bits of the luminance value, press "SEL" button again. When the digital tube stops flashing, it means that the luminance value has been set and saved.

2.DEMO software setting method

Refer to the "3.Software Operation Instructions" chapter for more details.

2.4 Trigger Function

This series of controller has three trigger modes: normal trigger, high intensity trigger, programmable trigger and four trigger polarities: rising edge trigger, falling edge trigger, positive follow trigger mode and negative follow trigger mode, and the default rising edge trigger. It also supports software triggering.See the table below for details.

Trigger mode	Trigger polarity
Normal trigger mode	Rising edge trigger
	Falling edge trigger
	Positive follow trigger mode
	Negative follow trigger mode
High intensity trigger mode	Rising edge trigger
	Falling edge trigger
	Positive follow trigger mode
	Negative follow trigger mode
Programmable trigger mode	Rising edge trigger
	Falling edge trigger

2.4.1 Trigger Mode Description

1. Normal trigger mode

Every time trigger, the channel corresponding to the trigger port of the controller will output a fixed signal, which is composed of the brightness level and the trigger pulse width value, where the brightness level can be set from 0 to 255, and the pulse width trigger can be modified by setting the pulse width trigger value and the normal trigger time unit, which can be set within 1μs-30s. Refer to the "2.1 Panel Description" and "3.1 Software Function Description" chapters for specific setting methods.

2. High intensity trigger mode

Every time trigger, the channel corresponding to the trigger port of the controller will output a fixed signal, which is output as a single channel 4A, and the pulse width trigger can be set from 0.01 to 5.00ms. Refer to the "2.1 Panel Description" and "3.1 Software Function Description" chapters for specific setting methods.

3.Programmable trigger mode

Switch to programmable trigger mode via DEMO. Programmable trigger mode uses the idea of programming to allow the trigger mode to write a trigger process according to actual needs. Each step in the trigger process can set the brightness and pulse width trigger of each channel to different values, and there is only one trigger source can trigger this step. The controller will cycle through the steps in the flow chart. Before using the programmable trigger mode, the flow chart must be set in advance. The flow chart needs to set the trigger signal source, brightness value and pulse width trigger, and the trigger signal source is selected from 1 to 4. In normal trigger mode, the brightness value can be set from 0 to 255, and the pulse width trigger can be set from 0μs to 30s. In the high intensity mode, the brightness value defaults to 255, the brightness setting is invalid, and the pulse width trigger can be set from 0 to 9.99ms. For the specific setting method, please refer to the "3.2 Programmable Trigger Software Operating Instructions" chapter.

For example, in a product inspection occasion, the camera needs to take pictures in 4 times, and the LED light output parameters required for each picture are different. Among them, the LED light output parameters required for each picture are shown in Table 2.1, and the corresponding timing diagram is shown in the figure 2.2 If the traditional trigger mode is used for control, the brightness level and pulse width trigger of the LED light of each channel need to be reset each time a picture is taken, which greatly increases the response time of the controller. In the same situation, in the programmable mode, you can divide 4 shots into 4 steps. In each step, the output parameters of each channel LED light are set according to the conditions in the table, and each step only needs a trigger source to control 4 channel output, the controller cyclically executes each step according to the preset LED light output parameters. Since the LED light output parameters required for each step of taking pictures by the camera are pre-set, the time required for setting the parameters is saved, and the response time of the controller is greatly reduced.

Table 2.1

Steps	Trigger source	Brightness level				Pulse width trigger			
		CH 1	CH 2	CH3	CH4	CH1	CH 2	CH3	CH4
1	1	250	50	250	50	400	100	400	100
2	2	200	150	200	150	300	200	300	200
3	3	150	200	150	200	200	300	200	300
4	4	50	250	50	250	100	400	100	400

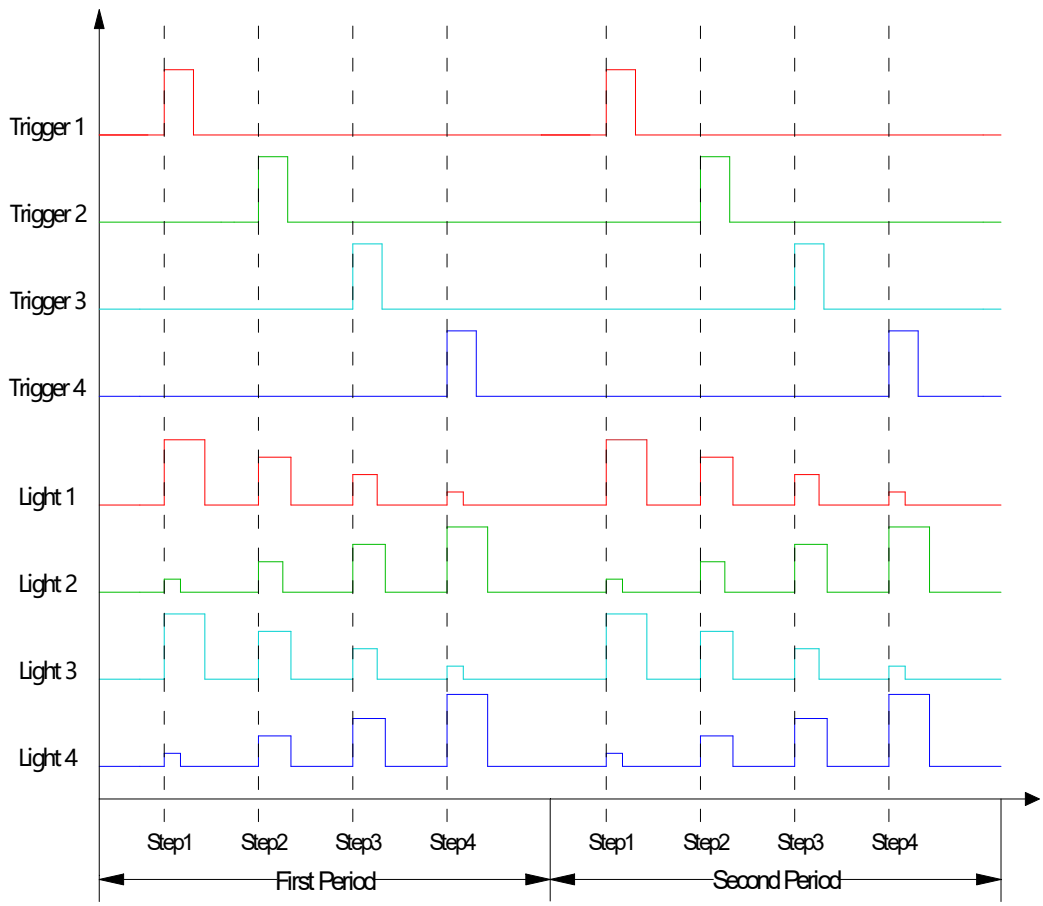

Figure 2.2

Notes:

(1)Trigger is the trigger signal, trigger frequency does not exceed 1.5kHz. Light is the LED light output signal;

(2) The above figure shows the timing diagram of four processes in the programmable trigger mode. The trigger signal sources are Trigger1, Trigger2, Trigger3, and Trigger4.

2.4.2 Sequence Reference Diagram Of Response Time

1. Rising Edge Trigger

When the trigger signal is rising edge or software trigger,illuminating time is equal to the set trigger pulse width. Trigger pulse width set via DEMO or adjustment key. Refer to Figure 2.3.

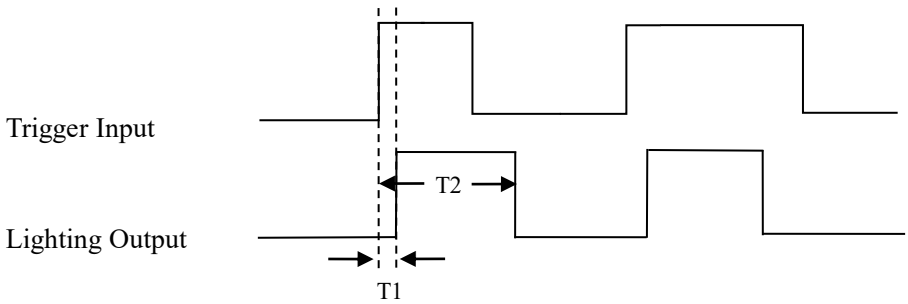

Figure 2.3

2. Falling Edge Trigger

When the trigger signal is falling edge or software trigger,illuminating time is equal to the set trigger pulse width. Trigger pulse width set via DEMO or adjustment key. Refer to Figure 2.4.

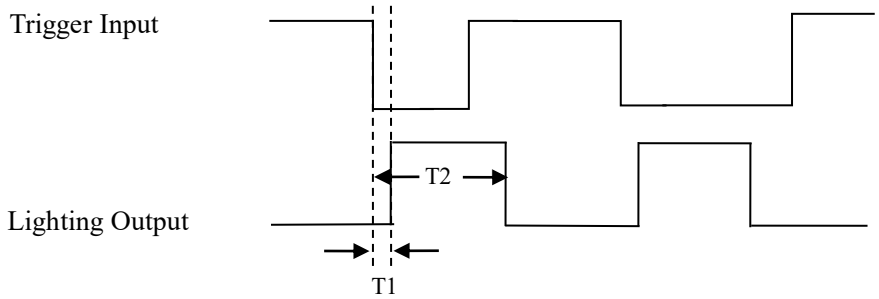

Figure 2.4

3. Positive follow trigger mode

When the trigger signal is high level, illuminating time is equal to pulse width of high level. Refer to Figure 2.5.

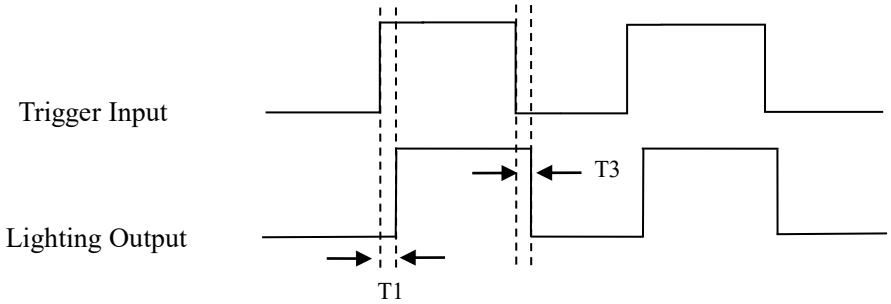

Figure 2.5

4. Negative follow trigger mode

When trigger signal is low level voltage, illuminating time is equal to low level pulse width. Refer to Figure 2.6.

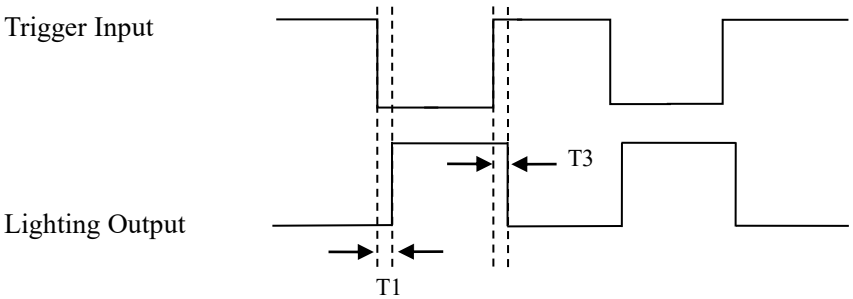

Figure 2.6

Notes:

(1) T1 is the open response time, T2 is the pulse width trigger, and T3 is the closed response time.

On normal trigger mode, T2 can be set in the range between 30μs-30s. On high intensity trigger mode, T2 can be set in the range between 0.03-5.00 ms.

(2)The respond time T1 and T3 in different output current and different input trigger voltage is shown on Table 2-2 Trigger Respond Time Table.

Table 2-2 Trigger Respond Time Table

Output Current (mA) / Trigger Voltage (V)	400		2000		4000	
	T1（μs）	T3（μs）	T3（μs）	T3（μs）	T1（μs）	T3（μs）
5	180	10	35	12	30	15
12	180	10	35	13	30	16
24	180	19	35	22	30	25

2.4.3 Trigger Wiring Diagram

There are 4 trigger ports(DI input) in this series of controllers. COM is the common port . It contains two-way optocoupler isolation. The input voltage is 0-2V, it is low level, and the input voltage is 5-24V for high level.

Two trigger wiring diagrams are given below:

1. NPN trigger type

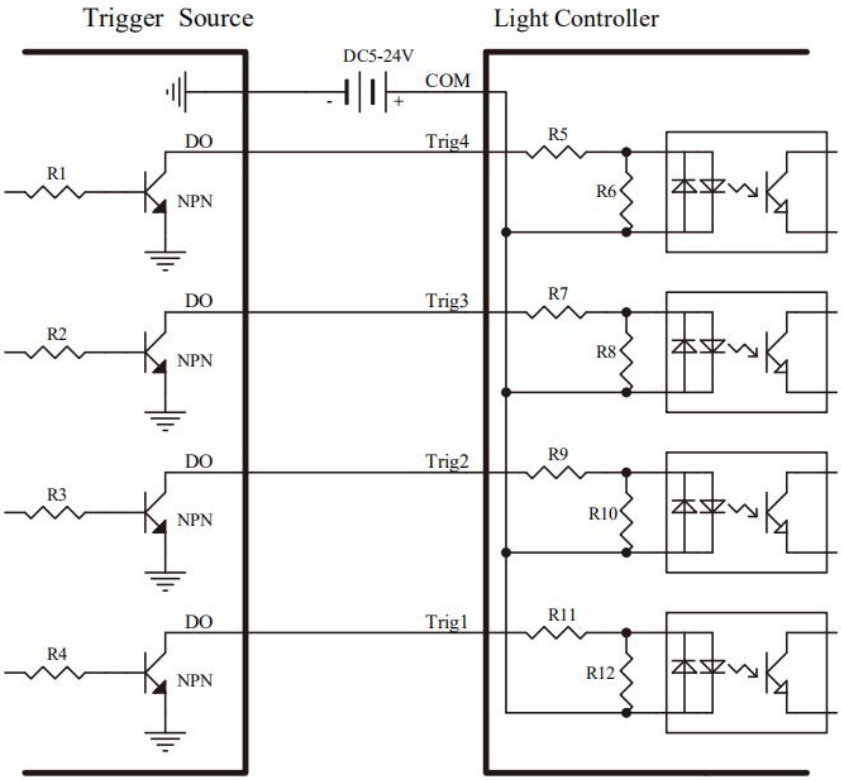

Trig Input Circuit for NPN Type Trigger

2. PNP trigger type

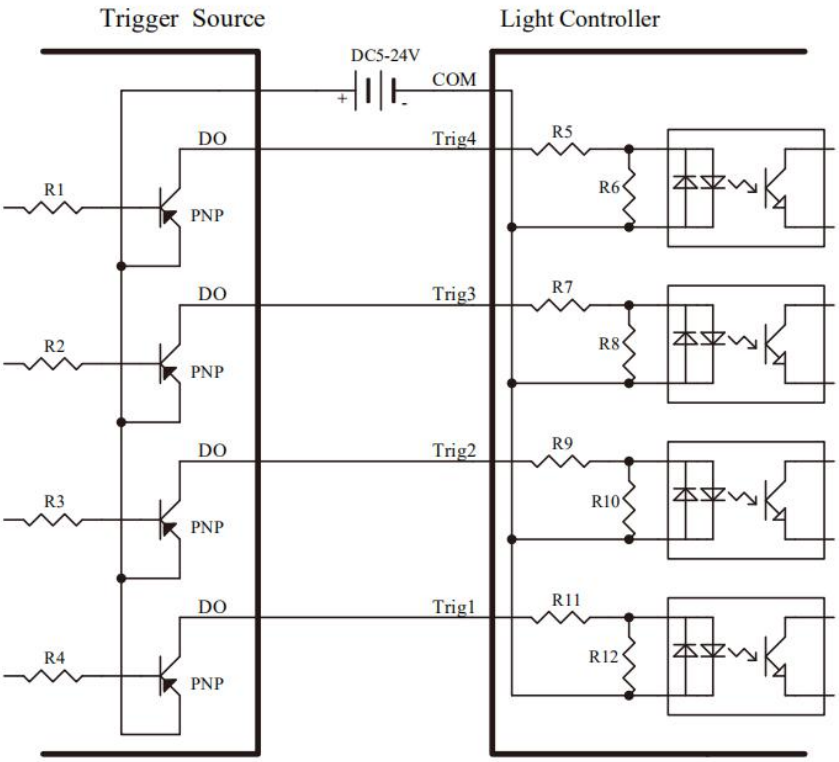

Trig Input Circuit for PNP Type Trigger

2.5 DO Function

The series controller has 4 DO outputs, each one can be controlled independently, the output logic can be set.

Software control: send instructions to control DO on/off, DO is directly controlled by control instructions.

Trigger control: The controller receives hardware or software trigger signals, DO follows channel output or DO outputs according to DO pulse width.

DO connection mode reference: : DO is the open collector output, the output load voltage range is DC 5-27V, the maximum output load current is 100mA, the wiring is shown in the following figure.(Note: When DO is connected to inductive load, it is necessary to connect external current diode to prevent reverse current from damaging internal components of IO module.)

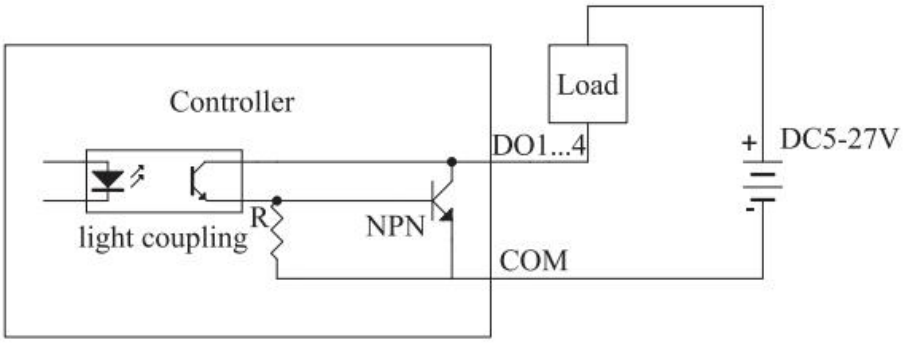

3. Software Operation Instructions

3.1 Software Function Description

No.	Function	Description	The Corresponding Interface
1	Set Intensity	Function: Set the output brightness level of the LED light Channel: The channel for which the brightness level needs to be set (parameter 0 represents all channels） Parameter: 0-255	Short / long command function
2	Read Intensity	Function: read the output brightness level of the LED light Channel:The channel that needs brightness level reading Parameter:None	Short command function
3	Turn On Channel(s)	Function: Turn on the corresponding channel Channel:The channel that needs to be opened (parameter 0 represents all channels) Parameter:None	Short / long command function
4	Turn Off Channel(s)	Function: Turn off the corresponding channel Channel: The channel that needs to be closed (parameter 0 represents all channels） Parameter:None	Short / long command function
5	Set Normal Trigger Time Unit	Function: set the time unit of normal trigger pulse width Channel: The channel for which the time units need to be set (parameter 0 represents all channels） Parameter: 0: 1μs 1：10μs 2：1ms 3：100ms	Short command function
6	Read Normal Trigger Time Unit	Function: read the time unit of normal trigger Channel:The channel that needs to read the time unit Parameter:None	Short command function
7	Set Normal Trigger Width	Function: set the output pulse width of normal trigger Channel: The channel for which the pulse width trigger needs to be set (parameter 0 represents all channels） Parameter: 1-999	Short / long command function

No.	Function	Description		The Corresponding Interface
8	Read Normal Trigger Width	Function: read the output pulse width of normal triggers Channel:The channel that needs pulse width trigger reading Parameter:None		Short command function
9	Set High Intensity Trigger Width	Function: Set trigger width of the High Intensity Trigger Mode Channel: The channel that need to be set High intensity trigger width (parameter 0 represents all channels) Parameter:1-500(unit 10μs)		Short / long command function
10	Read High Intensity trigger Width	Function: Read trigger width of the High Intensity Trigger Mode Channel: The channel that need to be read High intensity trigger width Parameter:None		Short command function
11	Software Trigger	Function: each time a command is sent, the time the LED light is on is the set value. Channel: channel that needs software trigger (parameter 0 represents all channels) Parameter: 1-3000 (unit 10ms)	Continuous mode	Short / long command function
		Function: each time send a command trigger a controller, the time LED light is trigger pulse width value Channel : channel that needs to be triggered by software (0 represents all channels) Parameters: 1 - 65535	Normal trigger mode /High intensity trigger mode	
		Function: each time a command is sent, it will trigger the programmable trigger step Channel : 1-36, select the module to trigger (1-4: module 1, 5-8 Module 2,...., 32-36: Module 9); Parameter: 1-64, select the programmable trigger step under the module (module) selected by the current channel value	Programmable trigger mode	

No.	Function	Description	The Corresponding Interface
12	Set Maximum Current	Function: set the maximum output current value of the channel Channel: channel for which the maximum current needs to be set (parameter 0 represents all channels） Parameter: 1 - 200 (unit 20mA)	Short / long command function
13	Read Maximum Current	Function: read the maximum output current value of the channel Channel: channel that needs to read the maximum current Parameter:None	Short command function
14	Set Trigger Delay	Function: Set trigger delay for corresponding channel Channel: The channel that need to be set trigger delay (parameter 0 represents all channels) Parameter:0-65000	Short / long command function
15	Read Trigger Delay	Function: Read trigger delay for corresponding channel Channel: The channel that need to be read trigger delay Parameter:None	Short Command Function
16	Set Trigger Delay Time Unit	Function: Set trigger delay time unit Channel: The channel that need to be set trigger delay time unit (0 represents all channels) Parameter: 0: 1μs 1：10μs 2：1ms	Short Command Function
17	Read Trigger Delay Time Unit	Function: Read trigger delay time unit Channel: The channel that need to be read trigger delay time unit Parameter:None	Short Command Function
18	Read Channel State	Function: Get channel state for corresponding channel Channel: The channel that need to be get channel state Parameter:None	Short command function
19	Read Property	Function: Read corresponding property for controller Channel:None Parameter: 1:Read Model 2:Read Firmware Version	Advanced setting function

No.	Function	Description	The Corresponding Interface
20	Read Serial Number	Function: Read serial number for controller Channel:None Parameter:None	Advanced setting function
21	Read IP Config	Function: Read IP configuration which will return message with IP address, sub-net mask and default gateway. Channel:None Parameter:None	Advanced setting function
22	Set Trigger Polarity	Function: Set trigger polarity for trigger mode Channel:channel that needs software trigger (parameter 0 represents all channels) Parameter:0:Positive follow trigger mode 1:Negative follow trigger mode 2:Falling edge trigger 3:Rising edge trigger	Advanced setting function
23	Read Trigger Polarity	Function: Read trigger method for trigger mode Channel: channel that needs software trigger Parameter:None	Advanced setting function
24	Enable CheckSum	Function: Enable checksum Channel:None Parameter: 0:Disable 1:Enable	Advanced setting function
25	Enable Respond	Function: Enable return value Channel:None Parameter: 0:Disable 1:Enable.	Advanced setting function
26	Set Load Detection Mode	Function: Set load detection mode Channel: channel that needs software trigger (parameter 0 represents all channels) Parameter:0:Detect Automatically 1:Set Manually	Advanced setting function
27	Enable Power Off Backup	Function: Enable power off backup, the data will be saved when the power is turned off. Channel:None Parameter: 0:Disable 1:Enable	Advanced setting function
28	Enable DHCP	Function: Enable DHCP Channel:None Parameter: 0:Disable 1:Enable	Advanced setting function

No.	Function	Description	The Corresponding Interface
29	Auto Sensing Of Light Rated Current Once	Function: Auto Sensing Of Light Rated Current Once Channel:None Parameter:None	Advanced setting function
30	Set Working Mode	Function: Set working mode Channel:None Parameter: 0:Continuous Mode 1:Normal trigger mode 2:High Intensity Trigger Mode 3:Set the working mode on panel	Advanced setting function
31	Read Working Mode	Function: Read working mode Channel:None Parameter:None	Advanced setting function
32	Set Keepalive Parameters	Function: Set keep-alive parameter Channel:None Parameter0:KeepAlive_time Parameter1:KeepAlive_interval. Parameter2:KeepAlive_probes.	Advanced setting function
33	Enable Keepalive	Function: Enable keep-alive Channel:None Parameter: 0:Disable 1:Enable	Advanced setting function
34	Read Channels	Function: Read channel amount Channel:None Parameter:None	Advanced setting function
35	Read Keepalive Switch States	Function: Read the keep-alive switch state for Ethernet communication Channel:None Parameter:None	Advanced setting function
36	Read Continuous Keepalive Time	Function: Read continuous keep-alive time for Ethernet communication Channel:None Parameter:None	Advanced setting function
37	Read Delivery Interval Time Of Prop Packet	Function: Read delivery interval time of Probe Packet for Ethernet communication Channel:None Parameter:None	Advanced setting function
38	Read Delivery Time Of Prop Packet	Function: Read delivery times of Probe Packet for Ethernet communication Channel:None Parameter:None	Advanced setting function

No.	Function	Description	The Corresponding Interface
39	Read Output Board Version	Function: Read the output board vision of controller Channel:None Parameter:None	Advanced setting function
40	Read Load Detection Mode	Function: load detection mode reading Channel: need to read the channel of load detection mode Parameter:None	Advanced setting function
41	Set Boot State	Function: Set boot protection for corresponding channel output Channel: The corresponding channel for setting boot protection (0 represents all channels). Parameter: 0:Set general light 1:Set general close	Advanced setting function
42	Read Module Boot State	Function: Read model boot state for corresponding channel Channel: The corresponding channel for reading boot protection. Parameter:None	Advanced setting function
43	Set D board handle intensity result switch state	Function: Set D board handle intensity result switch state Channel: None Parameter: 0:Close 1:Open	Advanced setting function
44	Read D board handle intensity result switch	Function: Read D board handle intensity result switch Channel: None Parameter: None	Advanced setting function
45	Set DO control source	Function: Set DO control source Channel : DO channels to be set (parameter 0 represents all channels) Parameter: 0: software Settings 1: Trig1 2: Trig2 3: Trig3 4: Trig4	Advanced setting function
46	Read DO control source	Function: Read DO control source Channel: The DO channel to read Parameter: None	Advanced setting function
47	Set DO control mode	Function: Set DO control mode Channel : DO channels to be set (parameter 0 represents all channels)	Advanced setting function

No.	Function	Description	The Corresponding Interface
		Parameter: 0: Follow the LED light 1: Follow the DO trigger pulse width	
48	Read DO control mode	Function: Read DO control mode Channel: The DO channel to read Parameter: None	Advanced setting function
49	Set DO polarity	Function: Set DO polarity Channel : DO channels to be set (parameter 0 represents all channels) Parameter: 0:Negative follow 1:Positive follow	Advanced setting function
50	Read DO polarity	Function: Read DO polarity Channel: The DO channel to read Parameter: None	Advanced setting function
51	Set DO standby value	Function: Set DO standby value Channel : DO channels to be set (parameter 0 represents all channels) Parameter: 0:Close 1:Open	Advanced setting function
52	Read DO standby value	Function: Read DO standby value Channel: The DO channel to read Parameter: None	Advanced setting function
53	Set DO software control electrical level	Function: Set DO software control electrical level Channel : DO channels to be set (parameter 0 represents all channels) Parameter: 0:0(close) 1:1(open)	Advanced setting function
54	Read DO software control electrical level	Function: Read DO software control electrical level Channel: The DO channel to read Parameter: None	Advanced setting function
55	Read DO actual output level	Function: Read DO actual output level Channel: The DO channel to read Parameter: None	Advanced setting function
56	Set DO delay	Function: Set DO delay Channel : DO channels to be set (parameter 0 represents all channels) Parameter:0-65000	Advanced setting function
57	Read DO delay	Function: Read DO delay Channel: The DO channel to read Parameter: None	Advanced setting function
58	Set DO delay unit	Function: Set DO delay unit Channel : DO channels to be set (parameter 0	Advanced setting function

No.	Function	Description	The Corresponding Interface
		represents all channels) Parameter: 0: 1μs 1: 10μs 2: 1ms	
59	Read DO delay unit	Function: Read DO delay unit Channel: The DO channel to read Parameter: None	Advanced setting function
60	Set DO pulse width	Function: Set DO pulse width Channel : DO channels to be set (parameter 0 represents all channels) Parameter: 1-999 (Refer to DO pulse width unit，max:30s)	Advanced setting function
61	Read DO pulse width	Function: Read DO pulse width Channel: The DO channel to read Parameter: None	Advanced setting function
62	Set DO pulse width unit	Function: Set DO pulse width unit Channel : DO channels to be set (parameter 0 represents all channels) Parameter: 0: 1μs 1: 10μs 2: 1ms 3: 100ms	Advanced setting function
63	Read DO pulse width unit	Function: Read DO pulse width unit Channel: The DO channel to read Parameter: None	Advanced setting function
64	Set user name	Function: Set user name Channel :None Parameter: User Name. ASCII only. (Max Length: 16)	Advanced setting function
65	Read user name	Function: Read user name Channel: None Parameter: None	Advanced setting function

3.2 Programmable Trigger Software Operating Instructions

No.	Function	Operation Instruction	The Corresponding Interface
1	Read Step Count	Click the "Programmable Trigger Setting" button, select the corresponding channel group, select "Read Step Count" in the function option, and then click the "Apply" button.	Programmable Trigger Function

No.	Function	Operation Instruction	The Corresponding Interface
2	Set Trigger Mode	Click the “Programmable Trigger Setting” button, select the corresponding channel group, and select “Set Trigger Mode” in the function option. Then, select corresponding trigger mode in the parameter and click “Apply” button; the parameter include two trigger modes: General Trigger Mode and Programmable Trigger Mode.	Programmable Trigger Function
3	Read Trigger Mode	Click the “Programmable Trigger Setting” button, select the corresponding channel group, select “Read Trigger Mode” in the function option and then click “Apply” button. Status bar will return the corresponding trigger mode.	Programmable Trigger Function
4	Set Current Step Index	Click the “Programmable Trigger Setting” button, select corresponding channel group, select “Set Current Step Index” in the function option, write the step number parameter in the parameter options (the range is greater than or equal to 1 and less than or equal to the total number of steps in the programmable trigger table), and then click the "Apply" button.	Programmable Trigger Function
5	Read Current Step Index	Click the “Programmable Trigger Setting”, select corresponding channel group, select “Read Current Step Index” in the function option, and then click the “Apply” button.	Programmable Trigger Function
6	Reset Current Step Index	Click the "Programmable Trigger Setting" button, select the corresponding channel group, select "Reset Current Step Index" in the function option, and then click the "Apply" button.	Programmable Trigger Function
7	Setting the start address	Click the "Programmable Trigger Setting" button, select the corresponding channel group, select "Setting the start address" in the function option, enter the start address parameter in the preferences (the start address is within the total number of steps) and then click the "Apply" button.and then click the "Apply" button.	Programmable Trigger Function

No.	Function	Operation Instruction	The Corresponding Interface
8	Setting the end Address	Click the "Programmable Trigger Setting" button, select the corresponding channel group, select "Setting the end Address" in the function option, enter the end address parameter in the preferences (the end address is within the total number of steps) and then click the "Apply" button.and then click the "Apply" button.	Programmable Trigger Function
9	Set the hardware reset switch	Click the "Programmable Trigger Setting" button, select the corresponding channel group, select "Set the hardware reset switch" in the function option, select on/off in the preferences and then click the "Apply" button.	Programmable Trigger Function
10	Set the start and end address mode switches	Click the "Programmable Trigger Setting" button, select the corresponding channel group, select "Set the start and end address mode switches" in the function option, select on/off in the preferences and then click the "Apply" button.	Programmable Trigger Function
11	Read programmable parameters	Click the "Programmable Trigger Setting" button, select the corresponding channel group, select "Set the start and end address mode switches" in the function option,select "Read the start address"/" Read the end address "/" Read the hardware reset switch "/" Read the start and End address mode switch" in the preferences and then click the "Apply" button.	Programmable Trigger Function
12	Add Programmable Trigger Step	Click the "Programmable Trigger Setting" button, select the corresponding channel group, select the position where the programmable trigger step needs to be inserted, click the "+" button on the interface, and insert a programmable trigger step in the upper line of the selected programmable trigger option, and then set the trigger source and trigger pulse width parameter.	Programmable Trigger Function
13	Delete Programmable Trigger Step	Click the "Programmable Trigger Setting" button, select the corresponding channel group, select the position where the	Programmable Trigger Function

No.	Function	Operation Instruction	The Corresponding Interface
		programmable trigger step needs to be deleted, and click the "-" button on the interface to delete the selected programmable trigger step.	
14	Write Programmable Trigger Table	Click the "Programmable Trigger Setting" button, select the corresponding channel group, set the programmable trigger table to be written, and click the "write" button.	Programmable Trigger Function
15	Read Programmable Trigger Table	Click the "Programmable Trigger Setting" button, select the corresponding channel group, and then click the "Read" button.	Programmable Trigger Function
16	Import Programmable Trigger Table	Click the "Programmable Trigger Setting" button, select the corresponding channel group, click the "Import" button, select the file location where the programmable trigger table needs to be uploaded, and click “Open” to import the selected programmable trigger table.	Programmable Trigger Function
17	Export Programmable Trigger Table	Click the "Programmable Trigger Setting" button, select the corresponding channel group, click the "Export" button, select the file location where the programmable trigger table needs to be saved, modify the name of the programmable trigger table, and click “Save”.	Programmable Trigger Function
18	Clear Status Bar	Click the "Programmable Trigger Setting" button, select the corresponding channel group, and then click the "Clear" button.	Programmable Trigger Function

Note:

For specific software operation instructions, please refer to the "V3.5 Controller DEMO Operation Instructions" document

3.3 User Programming Manual

In order to facilitate the secondary development of customers, our company provides a program development package for this controller. For details on how to use this program development package, please read the user programming manual provided by our company in detail.

4.Dimension Diagram

Mechanical Parameters

OPT-DPA2024EC-4

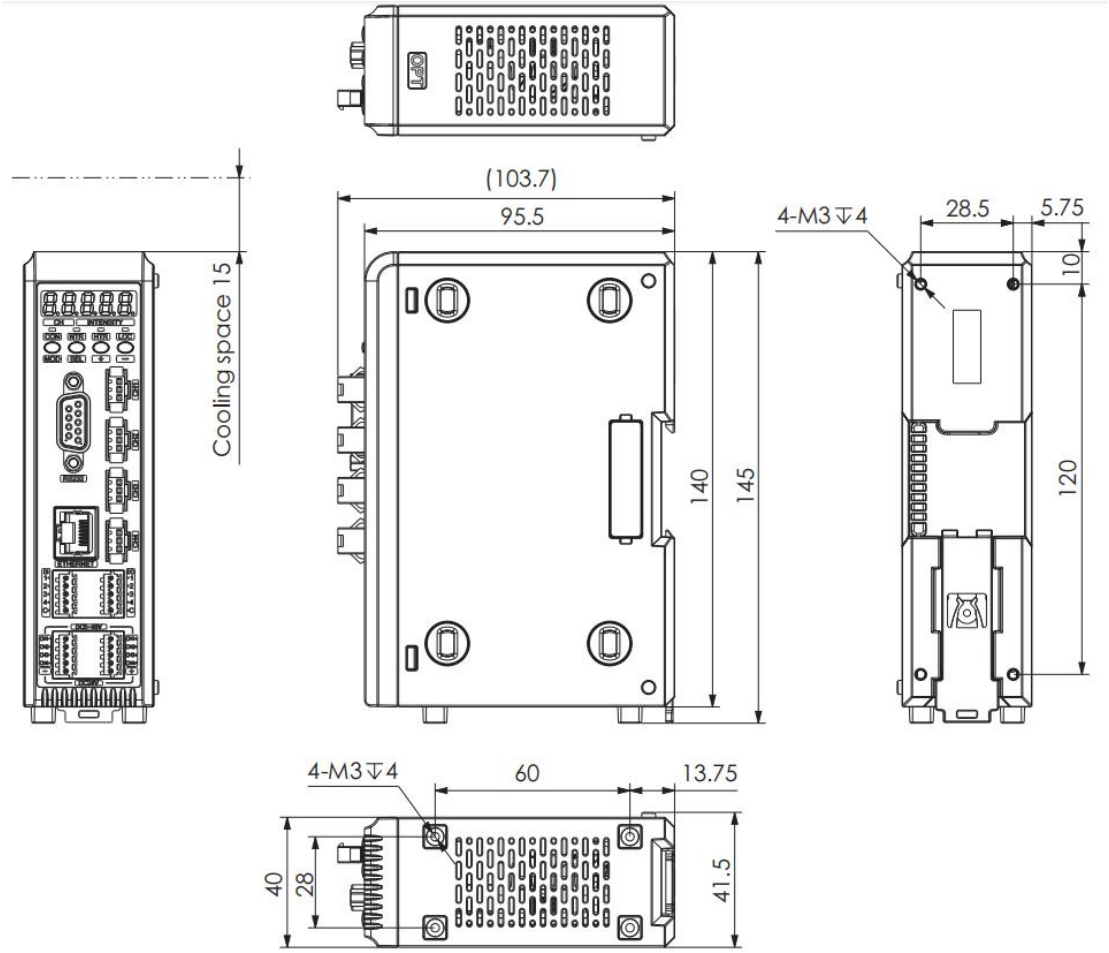
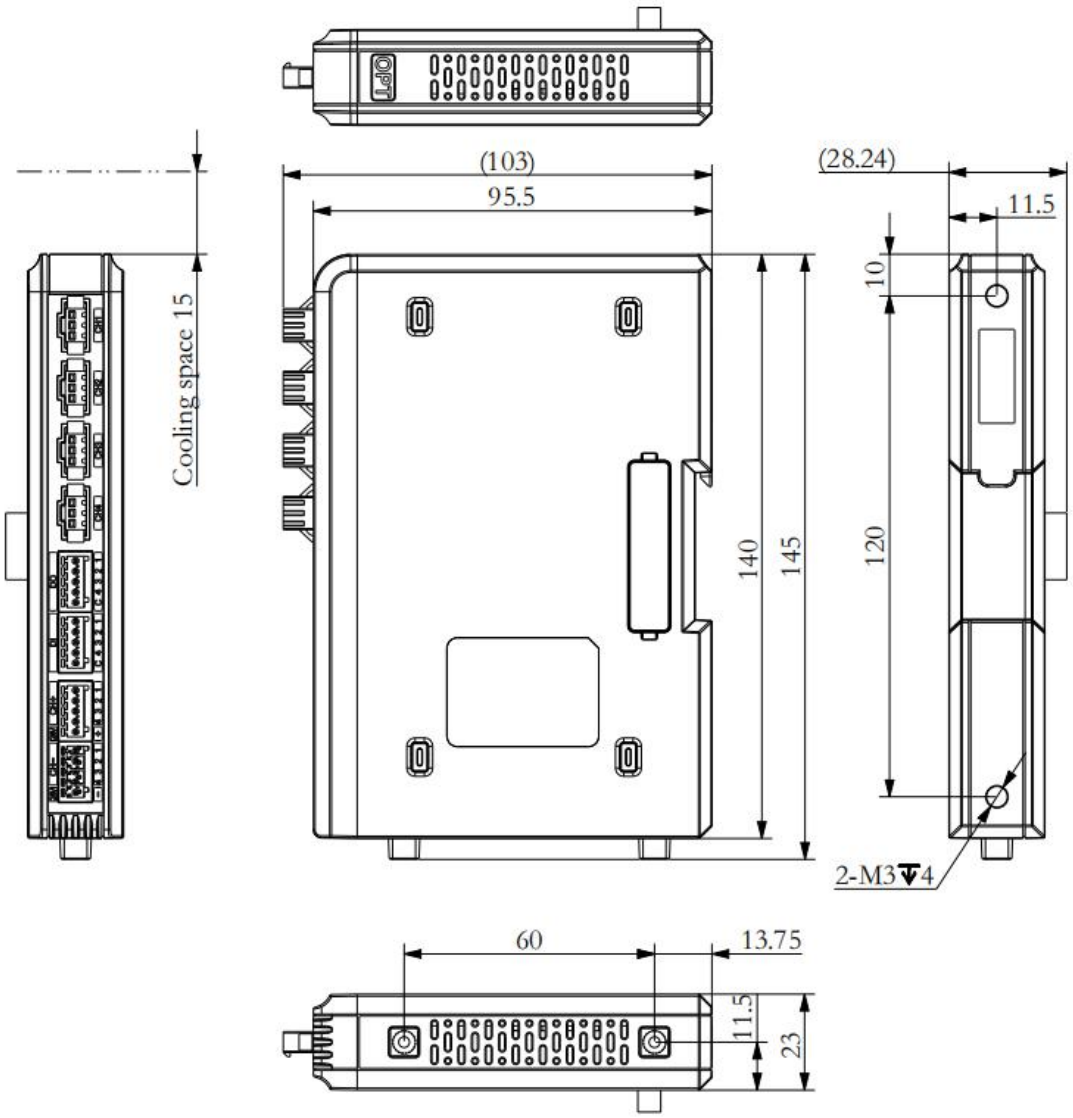
OPT-EMA2024EC-4